

OPEN

Compute Project

15kW @12V (N+1) Redundant Power Shelf Hardware V0.1

Author: Damir Klikic

1. License

Contributions to this Specification are made under the terms and conditions set forth in **Open Web Foundation Contributor License Agreement ("OWF CLA 1.0") ("**Contribution License") by:

Damir Klikic - **Schneider Electric**
Marlon- Galsim **– Schneider Electric**
Robert Bunger **- Schneider Electric**
You can review the signed copies of the applicable Contributor License(s) for this Specification on the OCP website at
http://www.opencompute.org/products/specsanddesign
Usage of this Specification is governed by the terms and conditions set forth in **Open Web Foundation Final Specification Agreement ("OWFa 1.0").**
You can review the applicable Specification License(s) executed by the above referenced contributors to this Specification on the OCP website at
http://www.opencompute.org/participate/legal-documents/
Note: The following clarifications, which distinguish technology licensed in the Contribution License and/or Specification License from those technologies merely referenced (but not licensed), were accepted by the Incubation Committee of the OCP:

NOTWITHSTANDING THE FOREGOING LICENSES, THIS SPECIFICATION IS PROVIDED BY OCP "AS IS" AND OCP EXPRESSLY DISCLAIMS ANY WARRANTIES (EXPRESS, IMPLIED, OR OTHERWISE), INCLUDING IMPLIED WARRANTIES OF MERCHANTABILITY, NON-INFRINGEMENT, FITNESS FOR A PARTICULAR PURPOSE, OR TITLE, RELATED TO THE SPECIFICATION. NOTICE IS HEREBY GIVEN, THAT OTHER RIGHTS NOT GRANTED AS SET FORTH ABOVE, INCLUDING WITHOUT LIMITATION, RIGHTS OF THIRD PARTIES WHO DID NOT EXECUTE THE ABOVE LICENSES, MAY BE IMPLICATED BY THE IMPLEMENTATION OF OR COMPLIANCE WITH THIS SPECIFICATION. OCP IS NOT RESPONSIBLE FOR IDENTIFYING RIGHTS FOR WHICH A LICENSE MAY BE REQUIRED IN ORDER TO IMPLEMENT THIS SPECIFICATION. THE ENTIRE RISK AS TO IMPLEMENTING OR OTHERWISE USING THE SPECIFICATION IS ASSUMED BY YOU. IN NO EVENT WILL OCP BE LIABLE TO YOU FOR ANY MONETARY DAMAGES WITH RESPECT TO ANY CLAIMS RELATED TO, OR ARISING OUT OF YOUR USE OF THIS SPECIFICATION, INCLUDING BUT NOT LIMITED TO ANY LIABILITY FOR LOST PROFITS OR ANY CONSEQUENTIAL, INCIDENTAL, INDIRECT, SPECIAL OR PUNITIVE DAMAGES OF ANY CHARACTER FROM ANY CAUSES OF ACTION OF ANY KIND WITH RESPECT TO THIS SPECIFICATION, WHETHER BASED ON BREACH OF CONTRACT, TORT (INCLUDING NEGLIGENCE), OR OTHERWISE, AND EVEN IF OCP HAS BEEN ADVISED OF THE POSSIBILITY OF SUCH DAMAGE.

1. Scope

This document provides reference specifications of Gemini PSU Power Shelf for Open Compute Rack power distribution. It includes Electrical, Safety compliance, Environmental, Mechanical and Control Specifications. It also includes supplemental *Specification*, such as power supply system redundancy, connector configuration, and signal timing.

The design specifics described herein are not intended to support all possible Open Compute system configurations.

Table of Contents

1. License 2
1. Scope 3
2. Overview 5
3. Gemini - Power Shelf Specification 5
4. Power Shelf Configuration 6
4.1. 15kW N+1 Dual Input Power Shelf Configuration 6
4.2. 9kW N+N Dual Input Power Shelf Configuration 7
5. Gemini - Power Shelf Specifications 8
5.1. Shelf AC Input 8
5.2. Input Protection 8
5.3. Power Factor and THD 8
5.4. Shelf Efficiency vs Load 8
With optimized shelf power management 8
5.5. Output Specification 9
5.6. Shelf Output Timing 9
5.7. Power Shelf External Interface 9
5.7.1. BBS1 Power shelf Interface 9
5.7.2. BBS2 Power shelf Interface 10
5.7.3. Fan and Sensor Interface 10
5.8. Hot-Swappable Feature 10
6. PSU Module Specification 11
6.1. PSU Module AC Input 11
6.2. PSU Module Input Protection 11

6.3. PSU Module Power Factor and THD 11
6.4. PSU Module Output 11
6.5. PSU Module Output Timing 12
6.6. PSU Module Efficiency vs Load 12
6.7. PSU Module External Control Interface 12
6.8. PSU Operating Indicators 12
6.9. PSU Module Reliability 13
7. ATS Specification 13
8. RMC Specification 13
8.1. RMC Overview 13
8.2. RMC PSU Status Features 14
8.3. RMC Software Interface 14
8.4. RMC Environmental Specification 15
8.5. RMC Relevant Standards 15
9. Safety, Regulatory and EMC Specification 16
10. Environmental Specifications 17
11. Mechanical Specifications 17
11.1. Shelf Interface Connectors 17
11.1.1. Shelf Busbar Specs 17
11.2. Gemini Power Shelf Drawing 18
11.2.1. 2U Power Shelf 18
11.2.1. Shelf DC Busbar Mounting 19
11.2.1. Shelf AC Input Connection 19
11.2.2. Rear View 2U Power Shelf 20
11.2.3. Power Shelf 3D Assembly Drawing 20
11.2.1. PSU Module 21

2. Overview

The Gemini PSU Power Shelf is a 2OU, 12.5VDC 15kW Open Compute Rack Power Supply. This PSU houses (6) 3kW power modules which can be configured as 15kW N+1 or 9kW 2N for higher redundancy. The integrated ATS allows for dual AC feed for the 15kW N+1 configuration. Independent lithium ion battery shelves can be added for in-rack back up, with expansion up to 2 shelves for extended runtime. The integrated RMC module allows direct interfacing with PSU modules, rack sensors, fan control, battery shelves (BBS) and host interface. It can be configured to operate in programmable constant-current mode to enable power peak shaving and support and control multiple battery shelves. The power shelf can operate in stand-alone mode during RMC failure or temporary loss of communication.

3. Gemini - Power Shelf Specification

General

PARAMETER	DESCRIPTION
Input Range	3-Phase, 5 Wire, 380/400 /415VAC
AC Inlet Configuration	Single input or dual input with Integrated Automatic Transfer Switch
Redundant Configuration	Single input path 3-Phase feed: 15kW N+1, 12kW N+2 or 9kW N+3 Dual input path: 15kW N+1 (with ATS) or 9kW 3+3 double redundancy w/o ATS
Integrated RMC Module	Direct Interface to PSU Modules, Fan Controller, Rack Sensor and Host Interface
Rated Power	15kW (5+1 configuration with ATS)
	9kW (3+3 Configuration without ATS)
Efficiency	Meet 80 Plus Platinum Energy Efficiency Standard
Output Connection	1 set of output blades for 12V DC output
+12VSB Standby Output	60W (Standby output 12.5V/5A)
BBS Interface	Dual BBS Interface for Backup and Grid Peak Shaving
RMC Power module Interface	3-Channels I^2C PMBus (CH1: PSU Modules, CH2: BBS1 Shelf, CH3: BBS2 Shelf)
Dimensions (W×H×D)	534.3×93×650mm (overall: 534.3×93×889.5)

Connectors

DESCRIPTION	TYPE	MANUFACTURE	MPN
Input Connector	3-phase input (2pcs)	Molex	042820-5223
BBS External Interface	16pin / 1pcs	Molex	501876-1640
BBS Interface for Extended Runtime	RJ45 / 1pcs	Molex	043202-8113
FAN and Sensor Backplane Interface	30pin / 2pcs	Molex	501876-3040
+12VSB / BGND	4Pin / 1pcs	Molex	172316-1104

4. Power Shelf Configuration

4.1. 15kW N+1 Dual Input Power Shelf Configuration

This Power Shelf configuration provides dual input and 5+1 PSU redundancy through the integrated Automatic Transfer Switch (ATS) and it's shown in Fig1. The ATS module is removable for easy assembly and maintenance.
The 380/400/415Vac 3ϕ input is connected to the Molex backplane connector with a rating of 600Vac/50A per terminal.
The Power Shelf also integrates hot-swappable RMC module, the RMC module provides interface with the PSU modules, battery shelves, rack sensors, rack fan controller(s) and host interface.

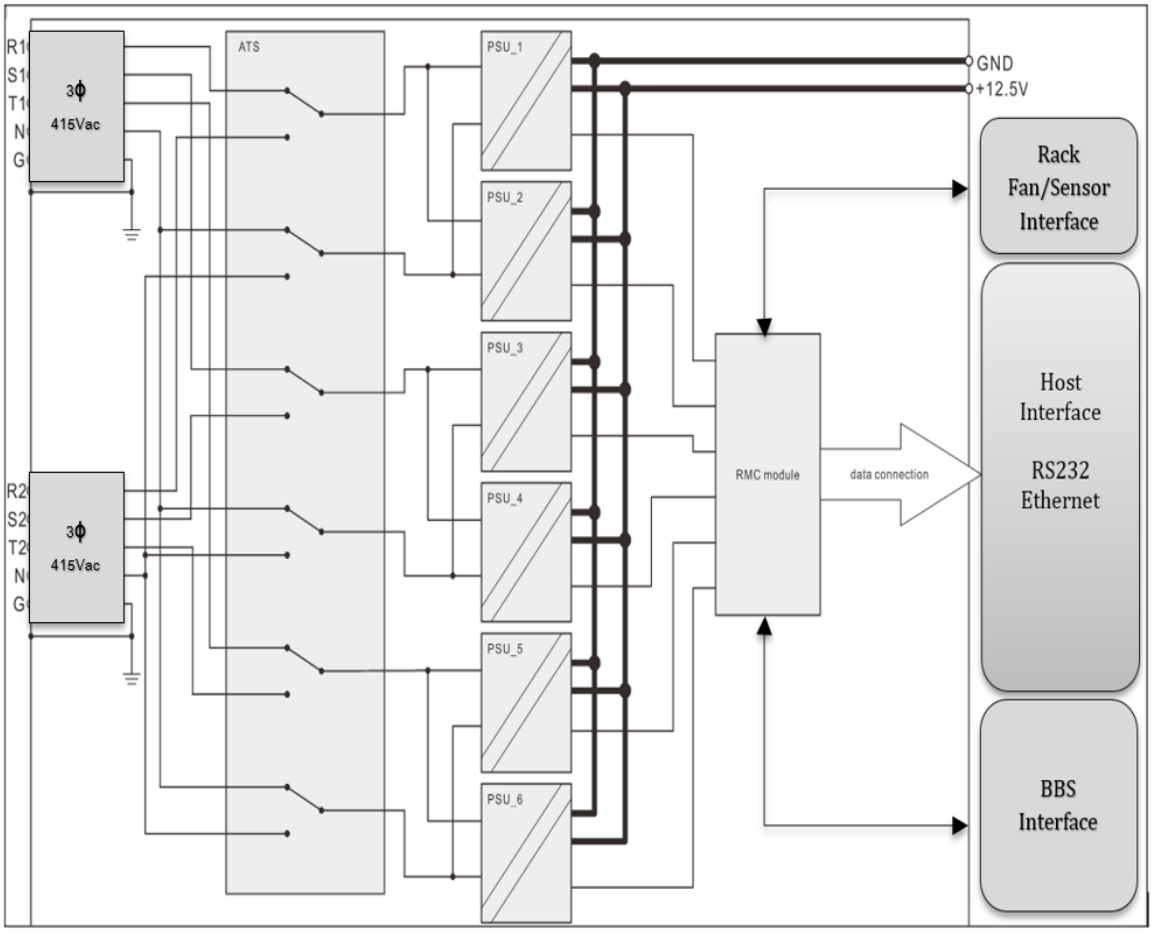

Figure 1: Gemini 15kW 5+1 Power Shelf Block Diagram

4.2. 9kW N+N Dual Input Power Shelf Configuration

Power shelf can be also configurated for dual input with 3+3 PSU redundancy.
For 380/400/415Vac 3ϕ inputs the Molex backplane connector (42820-5223) are provided with a rating of 600Vac/50A per terminal. The connection block diagram is presented in Fig.2.

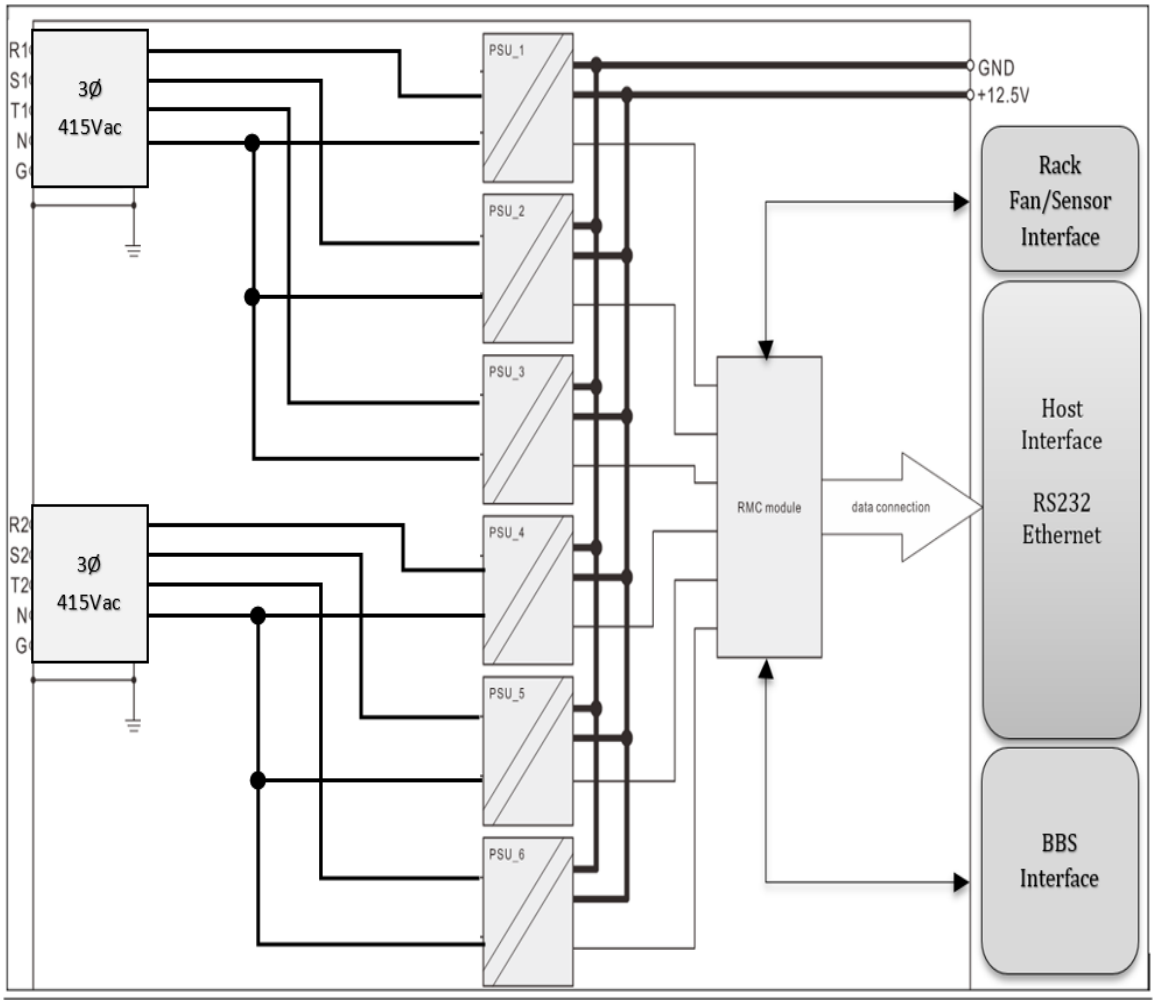

Figure 2: Gemini 9kW 3+3 Power Shelf Block Diagram

5. Gemini - Power Shelf Specifications

5.1. Shelf AC Input

PARAMETER	DESCRIPTION/CONDITION	MIN	NOM	MAX	UNIT
Input connector J64 & J65					
AC Input Configuration	3ϕ 5-Wire				
AC Nominal Input Voltage	Line to Line input		400		VAC
AC Input Voltage Range		312		456	VAC
Max Input Current	Per line			17	Arms
Input Frequency		47	50/60	63	Hz

5.2. Input Protection

PARAMETER	DESCRIPTION/CONDITION	MIN	NOM	MAX	UNIT
Under-Voltage Protection	Line to Line input	300			VAC
Inrush Current Limiting				150	%
Overload Shutdown Protection				≥ 110	%
Other Protections	OVP, OTP, Short Circuit				

5.3. Power Factor and THD

PARAMETER	DESCRIPTION/CONDITION	MIN	NOM	MAX	UNIT
Power Factor	≥ 20% Load	>0.96	0.97		
	≥ 50% to 100% Load	>0.98	0.99		
THD	≥ 30% Load			< 8	%
	≥ 50% Load			< 6	%
	≥ 80% Load			< 5	%
	100% Load			< 5	%

5.4. Shelf Efficiency vs Load

PARAMETER	DESCRIPTION/CONDITION	MIN	NOM	MAX	UNIT
Efficiency	20% Load			>90	%
	50% Load			94	%
	80% Load			94	%
	100% Load			>91	%

With optimized shelf power management

PARAMETER	DESCRIPTION/CONDITION	MIN	NOM	MAX	UNIT
Efficiency	20% Load			94	%
	50% Load			94	%
	80% Load			93.5	%
	100% Load			93	%

5.5. Output Specification

PARAMETER	DESCRIPTION/CONDITION	MIN	NOM	MAX	UNIT
Main Output Busbar					
Nominal Output Voltage			12.5		VDC
Output Voltage Regulation		-2		2	%
Nominal Output Power 1	3+3 configuration, Ta<45°C		9000		W
Nominal Output Power 2	5+1 configuration, Ta<45°C		15000		W
Nominal Output Current 1	3+3 configuration, Ta<45°C		720		ADC
Nominal Output Current 2	5+1 configuration, Ta<45°C		1200		ADC
Output Ripple voltage				120	mV
Dynamic Load Regulation			+-3%		%
PSU Module Current Sharing Tolerance	> 40% Load		5		%
Response Time				<500	uS
Output Voltage Temperature Coefficient				0.02	%/°C
Shelf Busbar Voltage Drop	1200A Load @ 60°C			17	mV
Overload Capability	LED warning signal, Output voltage Regulated.			110	%

5.6. Shelf Output Timing

PARAMETER	DESCRIPTION/CONDITION	MIN	NOM	MAX	UNIT
Start-Up Time	PS_ON to Output Voltage Regulation			50	mS
Hold-Up Time	100% Load	12			mS
Output Voltage Overshoot	Turn-On and Turn-Off			<10	%
Dynamic Response time	10% -90% Load Transient			<500	uS

5.7. Power Shelf External Interface

5.7.1. BBS1 Power shelf Interface

BBS1 INTERFACE	DESCRIPTION/CONDITION
BBS_On	RMC Signal to BBS Shelf for ON/OFF control
BBS_PWOK	BBS Signal to RMC to indicate Main 12V output is within regulated range during Battery backup mode.
BBS_Present	BBS Shelf signal to RMC to indicate the BBS is connected to RMC interface port.
BBS_AC_Good	RMC Signal to BBS Shelf to indicate that the AC input voltage is within range to enable BBS Charging mode and utility peak shaving function.
BBS_Alert	BBS Shelf Signal to RMC to indicate Fault conditions such as OVP, OCP, OTP.
PMBus CLK2	RMC PMBus I2C Channel2 Clock signal for PMBus protocol data transfer.
PMBus SDA2	RMC PMBus I2C Channel2 Data signal for PMBus protocol data transfer

5.7.2. BBS2 Power shelf Interface

BBS2 INTERFACE	DESCRIPTION/CONDITION
BBS_On	RMC Signal to BBS Shelf for ON/OFF control
BBS_PWOK	BBS Signal to RMC to indicate Main 12V output is within regulated range during Battery backup mode.
BBS_Present	BBS Shelf signal to RMC to indicate the BBS is connected to RMC interface port.
BBS_AC_Good	RMC Signal to BBS Shelf to indicate that the AC input voltage is within range to enable BBS Charging mode and utility peak shaving function.
BBS_Alert	BBS Shelf Signal to RMC to indicate Fault conditions such as OVP, OCP, OTP.
PMBus CLK3	RMC PMBus I2C Channel3 Clock signal for PMBus protocol data transfer.
PMBus SDA3	RMC PMBus I2C Channel3 Data signal for PMBus protocol data transfer

5.7.3. Fan and Sensor Interface

RACK FAN AND SENSOR INTERFACE	DESCRIPTION/CONDITION
PWM	10-Channels Interface for Fan Speed Control
TACH	10-Channels Interface for Fan Speed and Fault Monitoring
I2C	10-Channels for I2C compatible sensor interface
Digital I/O	Control input/output for fan and sensor alarm and control signal
+12VSB	Power supply voltage for sensor signal conditioning circuit.

5.8. Hot-Swappable Feature

- PSU Hot-Swap 0-100% Load Condition
- PSU Hot-Swap during RMC Online Communication
- RMC Hot-Swap during PSU Operation
- Replaceable ATS module.

6. PSU Module Specification

6.1. PSU Module AC Input

PARAMETER	DESCRIPTION/CONDITION	MIN	NOM	MAX	UNIT
AC Input Configuration	1PH 3-Wire (L-N-G)				VAC
AC Nominal Input Voltage	Line to Neutral input		240		
AC Input Voltage Range		180		264	VAC
Max Input Current				17	Arms
Input Frequency		47	50/60	63	Hz

6.2. PSU Module Input Protection

PARAMETER	DESCRIPTION/CONDITION	MIN	NOM	MAX	UNIT
Under-Voltage Protection	Line to Line input		175		VAC
Inrush Current Limiting				<150	%
Overload Protection				≥ 110	%
Other Protections	OVP, Short Circuit, OTP				

6.3. PSU Module Power Factor and THD

PARAMETER	DESCRIPTION/CONDITION	MIN	NOM	MAX	UNIT
Power Factor	≥ 20% Load	>0.96	0.97		
	≥ 50% to 100% Load	>0.98	0.99		
THD	≥ 30% Load			<8	%
	≥ 50% Load			<6	%
	≥ 80% Load			<5	%
	100% Load			<5	%

6.4. PSU Module Output

PARAMETER	DESCRIPTION/CONDITION	MIN	NOM	MAX	UNIT
Nominal Output Voltage			12.5		VDC
Output Voltage Regulation		-1		+1	%
Nominal Output Power	Ta<45°C		3000		W
Output Ripple voltage				120	mV
Dynamic Load Regulation		-3		+3	%
Load Sharing Unbalanced	50% Load		5		%
Response Time				<500	uS
Output Voltage Temperature Coefficient				0.02	%/°C

6.5. PSU Module Output Timing

PARAMETER	DESCRIPTION/CONDITION	MIN	NOM	MAX	UNIT
Start-Up Time	PS_ON to Output Voltage Regulation			50	mS
Hold-Up Time	100% Load	12			mS
Output Voltage Overshoot	Turn-On and Turn-Off			<10	%
Dynamic Response time	10% -90% Load Transient			<500	uS

6.6. PSU Module Efficiency vs Load

PARAMETER	DESCRIPTION/CONDITION	MIN	NOM	MAX	UNIT
Efficiency	≥ 20% Load		93		%
	≥ 40% Load		94.3		%
	≥ 60% Load		93.5		%
	≥ 80% Load		92.6		%
	100% Load		91.5		%

6.7. PSU Module External Control Interface

PARAMETER	DESCRIPTION/CONDITION
PS_On	Power On/Off Signal from RMC
PWOK	PSU Signal to RMC to indicate +12V output is within Regulating range
Alert	PSU Signal to RMC to indicate Fault condition
Present	PSU signal to RMC to indicate PSU is connected to the Powershelf
Vin_Ok	PSU Signal to RMC to indicate AC Input voltage is within range.
A2, A1, A0	PSU PMBus address for RMC communication
CLK, SDA	I2C/PMBus Interface to RMC Module

6.8. PSU Operating Indicators

PARAMETER	DESCRIPTION/CONDITION
AC OK	Green: LED ON, AC Input is within range
DC_OK	Yellow: LED ON, DC Output voltage is within range
FAULT	Red: LED ON, Fault condition (OVP, OCP, OTP, UVP, Fan Failure)

6.9. PSU Module Reliability

PARAMETER	DESCRIPTION/CONDITION	MIN	NOM	MAX	UNIT
MTBF	45C/100% Load	250,000			Hrs
Diode/Mosfet De-rating	100% Load			85	%
Bulk Cap Voltage De-rating	Maximum Input Voltage			90	%
Temperature De-Rating	100% Load			85	%
HALT Low Temperature				-30	°C
HALT High Temperature				70	°C
HALT Vibration				35	G

7. ATS Specification

PARAMETER	DESCRIPTION/CONDITION	MIN	NOM	MAX	UNIT
AC Input Configuration	3ϕ 5-Wire				VAC
AC Nominal Input Voltage	Line to Line input		400		
AC Input Voltage Range		300		456	VAC
Max Input Current	Per line			17	Arms
Input Frequency		47	50/60	63	Hz
ATS Transfer Time			8	<10	ms

8. RMC Specification

8.1. RMC Overview

Rack Management Controller (RMC) module is designed to integrate directly into OCP Power Shelf, providing interfaces for monitoring and control of PSU modules, associated battery shelves, rack sensors and controls and datacenter management applications.
The RMC module communicates to the induvial PSU modules via PMBus/I2C Channel 1 using PMBus 1.2 protocol and RMC simple signaling for PSU controls.
The RMC communicates to the BBS1 shelf via PMBus/I2C Channel 2 and BBS2 Shelf via PMBus/I2C Channel 3 using PMBus 1.2 protocol and RMC simple signaling for BBS controls.

RMC Interface to PSU Module:

- **PSON:** RMC Signal to PSU module for PSU ON/OFF control
- **PWOK:** PSU Signal to RMC to indicate Main 12.5V output is within regulated range.
- **PSU_Present:** PSU module signal to RMC to indicate the PSU module is inserted in the PSU Shelf slot.
- **PSU_VinOK:** PSU Signal to RMC to indicate that the AC input voltage is within range.

- **PSU_Alert:** PSU Signal to RMC to indicate Fault conditions such as OVP, OCP, OTP.
- **PMBus CLK1:** RMC clock signal for PMBus protocol data transfer
- **PMBus SDA1:** RMC/PSU data signal for PMBus/I2C data transfer.

RMC Interface to BBS Shelf:

- **BBS_ON:** RMC Signal to BBS Shelf for ON/OFF control
- **BBS_PWOK:** BBS Signal to RMC to indicate Main 12V output is within regulated range during Battery backup mode.
- **BBS_Present:** BBS Shelf signal to RMC to indicate the BBS is connected to RMC interface port.
- **BBS_AC_Good:** RMC Signal to BBS Shelf to indicate that the AC input voltage is within range to enable BBS Charging mode and utility peak shaving function.
- **PSU_Alert:** BBS Shelf Signal to RMC to indicate Fault conditions such as OVP, OCP, OTP.
- **PMBus CLK2:** RMC clock signal for PMBus protocol data transfer to BBS1 Shelf.
- **PMBus SDA2:** RMC/BBS1 data signal for PMBus/I2C data transfer to BBS1 Shelf.
- **PMBus CLK3:** RMC clock signal for PMBus protocol data transfer to BBS2 Shelf.
- **PMBus SDA3:** RMC/BBS2 data signal for PMBus/I2C data transfer to BBS2 Shelf.

8.2. RMC PSU Status Features

- Input and output voltage
- Input and output current
- Fan speed
- PSU protection log information
- Ambient temperature
- FRU information (such as Manufacturer and Product Name, Part/Model/SN & Revision

8.3. RMC Software Interface

PARAMETER	DESCRIPTION/CONDITION
Linux	AMI Linux distribution for the iBMC
IPMI	AMI MegaRAC IPMI 2.0
DCMI	DCMI 1.5 subset
CLI	DMTF SM-CLP (AMI implementation)
CLI Command set baseline	CLI specification, v1.0 2012/5/6
PMBus	PMBus specification Part II - Command Language, Rev 1.2, 2019-09

8.4. RMC Environmental Specification

PARAMETER	DESCRIPTION/CONDITION	MIN	NOM	MAX	UNIT
Operating Ambient Temperature		0		50	°C
Storage Temperature		-40		85	°C
Operating Relative Humidity	Non-Condensing	10		90	%
Storage Relative Humidity	Non-Condensing	10		95	%
Operating altitude	No De-rating			2000	m
Operating vibration	0.5 g acceleration ion, 1.5 mm amplitude, 5 to 500 Hz, 10 sweeps at 1 octave/minute for each of the three axes				
Non-operating vibration	1.0 g acceleration, 3/0mm amplitude, 5 to 500 Hz, 10 sweeps at 1 octave/minute for each of the three axes.				

8.5. RMC Relevant Standards

PARAMETER	DESCRIPTION/CONDITION	MIN	NOM	MAX	UNIT
Open Computing	Open Compute Open Rack Standard V1.1 Open Compute Project Open Hardware Management Proposed Specification for Remote Machine Management Version 1.01 2/25/2014				
PMBus	Part I – General Requirements, Transport and Electrical Interface, Rev 1.2., 2010-09-06 Part II – Command Language, Rev 1.2., 2010-09-06				
IPMI	Intelligent Platform Management Interface (IPMI 2.0)				
DMTF/CLP	DMTF Server Management Command Line (SM CLP) Specification (DSP0214, v1.0.2)				
SNMP/PET	Platform Event Trap Specification, v1.0, revision 1.00				
DCMI	Data Center Management Interface specification version 1.5				

9. Safety, Regulatory and EMC Specification

PARAMETER	DESCRIPTION / CONDITION	CRITERION
Agency Approvals	Approved to the latest revisions/amendments of the following standards: (pending) UL 60950-1 Second Edition CAN/CSA-C22.2 No. 60950-1-07 Second Edition IEC 60950-1:2005 EN 60950-1:2006	Approved by independent body (see CE Declaration) (pending)
Insulation	Input (L/N) to case (PE) Input (L/N) to output Output to case (PE)	Basic Reinforced Functional
Creepage / Clearance	Primary (L/N) to protective earth (PE) Primary to secondary	
Electrical Strength Test	Input to case Input to output (tested by manufacturer only)	Min. 2121Vdc Min. 4242Vdc
Max. Leakage Current	AC input voltage of TBD VAC, line frequency of 50Hz and a temperature of 25°C.	TBD A
Conducted Emission	EN55022 / CISPR 22: 0.15 … 30 MHz, QP and AVG	Class A
Radiated Emission	EN55022 / CISPR 22: 30 MHz … 1 GHz, QP	Class A
Harmonic Emissions (per module)	IEC61000-3-2, Vin = 115/230 VAC, 50 Hz, 100% Load	Class A
Acoustical Noise	Sound power statistical declaration (ISO 9296, ISO 7779, IS9295) @50% load	60 dBA
AC Flicker	IEC / EN 61000-3-3, dmax < 3.3%	
ESD Contact Discharge	IEC / EN 61000-4-2, ±8 kV, 25+25 discharges per test point (metallic case, LEDs, connector body)	A
ESD Air Discharge	IEC / EN 61000-4-2, ±15 kV, 25+25 discharge per test point (user accessible surfaces)	A
Radiated Electromagnetic Field	IEC / EN 61000-4-3, 10 V/m, 1 kHz/80% Amplitude Modulation, 1 µs Pulse Modulation, 10 kHz…2 GHz	A
Burst	IEC / EN 61000-4-4, level 3 AC port ±2 kV, 1 minute DC port ±1 kV, 1 minute	A
Surge	IEC / EN 61000-4-5 Line to earth: level 3, ±2 kV Line to line: level 2, ±1 kV	A
RF Conducted Immunity	IEC/EN 61000-4-6, Level 3, 10 Vrms, CW, 0.1 … 80 MHz	A

10. Environmental Specifications

PARAMETER	DESCRIPTION/CONDITION	MIN	NOM	MAX	UNIT
Operating Temperature	@ full load, up to 4000 m: @ full load, up to 1800 m: @ 75% load, up to 1800 m:	-5 -5 -5		+35 +45 +55	°C
Non-Operating Temperature		-40		+70	°C
Humidity	Operating: @ at 40 °C, non-condensing Non-Operating: non-condensing	7 5		93 95	%RH
Altitude	Operation: Non-Operation:			4000 13000	m
Shock	Operating: 11ms half-sine shocks in Z axis 10+ve, 10-ve Non-Operating: 11ms half-sine shocks in Z axis 10+ve, 10-ve		5 30		g
Vibration	Operating: 0.2g rms random Non-Operation: 1g rms random	5		500	Hz
Acoustic Noise Emissions	@ normal operation, and 50% load sharing fan speed			70 7000	dBA rpm
Cooling	When equipped with operating PSUs			50	Pa

11. Mechanical Specifications

PARAMETER	
Rack Unit	2OU
Dimensions (W×H×D)	534.3×93×650mm (overall: 534.3×93×889.5)

11.1. Shelf Interface Connectors

DESCRIPTION	TYPE	MANUFACTURE	MPN
Input Connector	3-phase input (2pcs)	Molex	042820-5223
BBS External Interface	16pin / 1pcs	Molex	501876-1640
BBS Interface for Extended Runtime	RJ45 / 1pcs	Molex	043202-8113
FAN and Sensor Backplane Interface	30pin / 2pcs	Molex	501876-3040
+12VSB / BGND	4Pin / 1pcs	Molex	172316-1104

11.1.1. Shelf Busbar Specs

PARAMETER	DESCRIPTION/CONDITION	MIN	NOM	MAX	UNIT
Voltage at point of connection to bus bar	Shelf output voltage at no load.		12.5		Vdc
Busbar current Density				3.5	A/mm²
Bus bar material	copper with nickel plating.			CC100	
Bus bar maximum Current				1200	Adc

Bus bar maximum voltage drop	Voltage drop with respect to the location of the PSU module to the shelf bus bar	40	mV
Bus bar maximum power dissipation	Power loss with respect to the location of the PSU module to the shelf bus bar	40	Watts
Shelf Internal Bus bar Temperature	40C Ambient Temperature	70	°C

11.2. Gemini Power Shelf Drawing

11.2.1. 2U Power Shelf

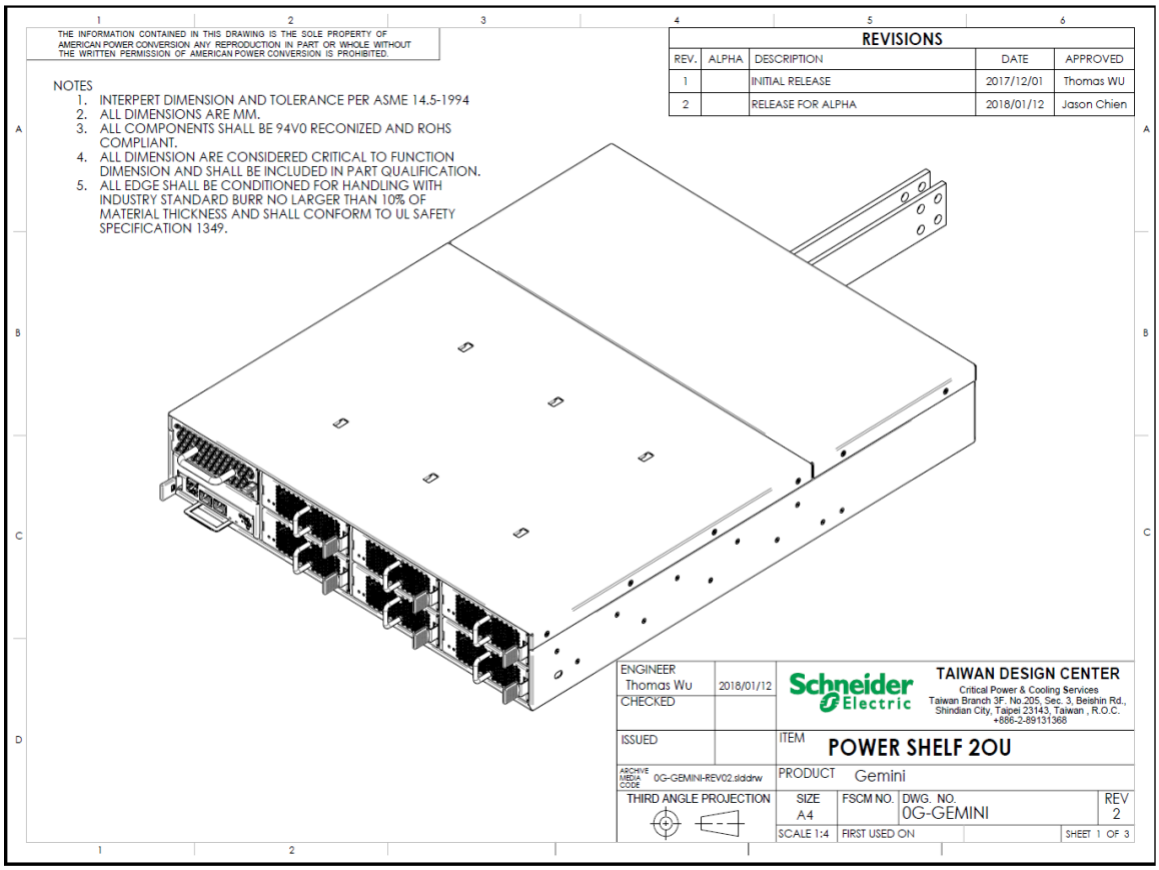

11.2.1. Shelf DC Busbar Mounting

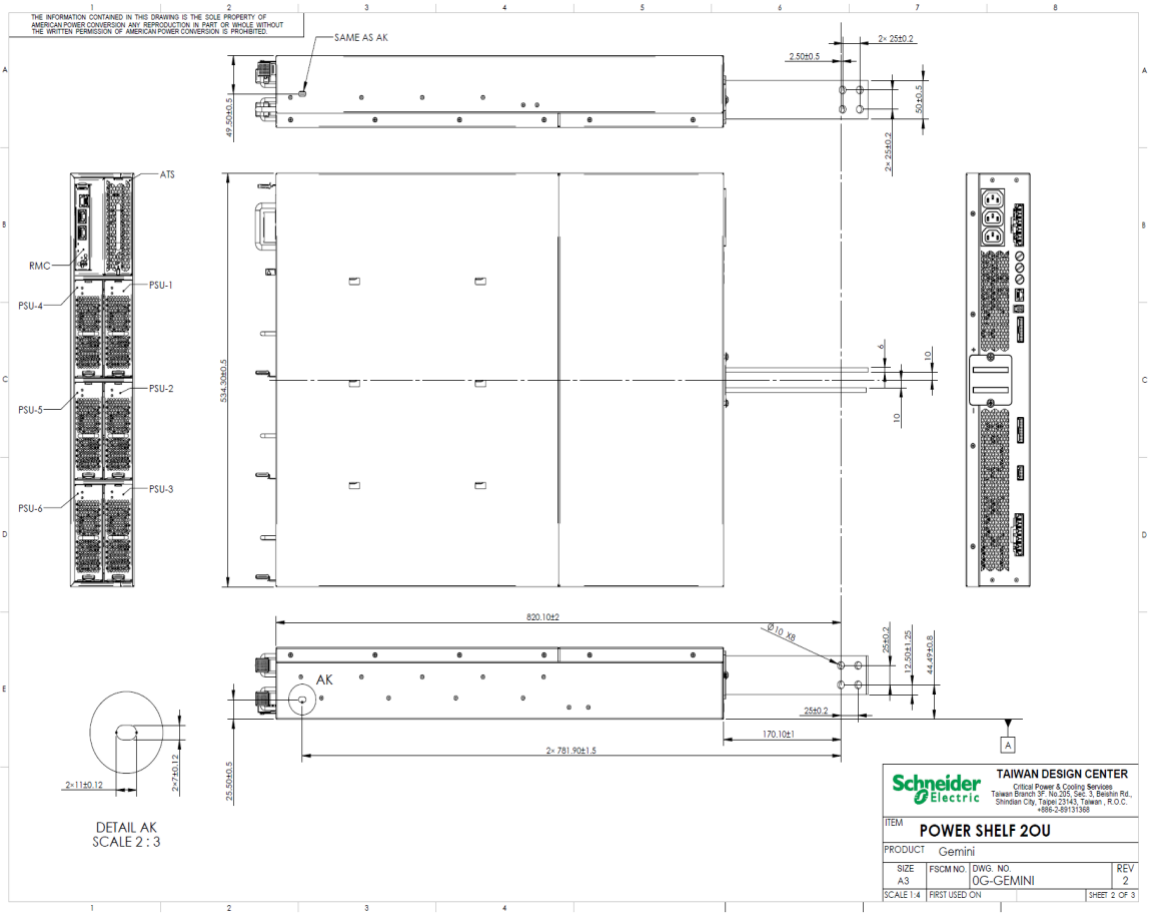

11.2.1. Shelf AC Input Connection

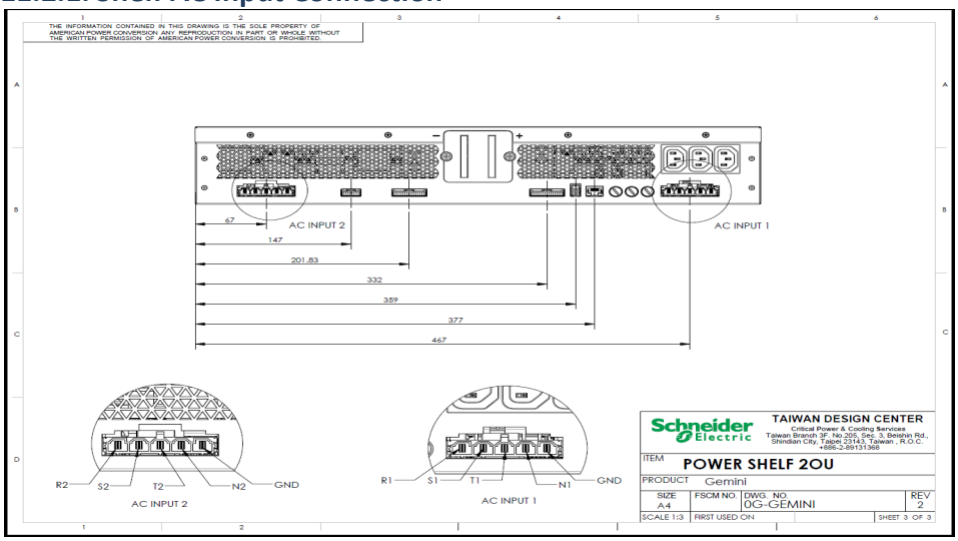

11.2.2. Rear View 2U Power Shelf

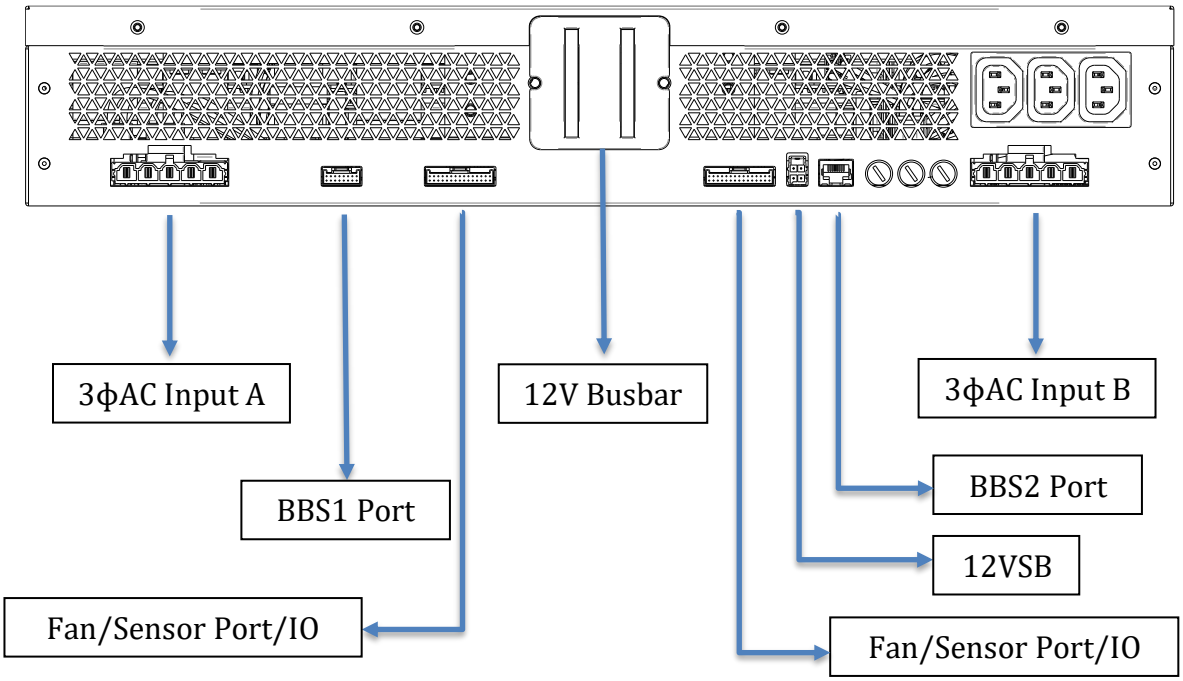

11.2.3. Power Shelf 3D Assembly Drawing

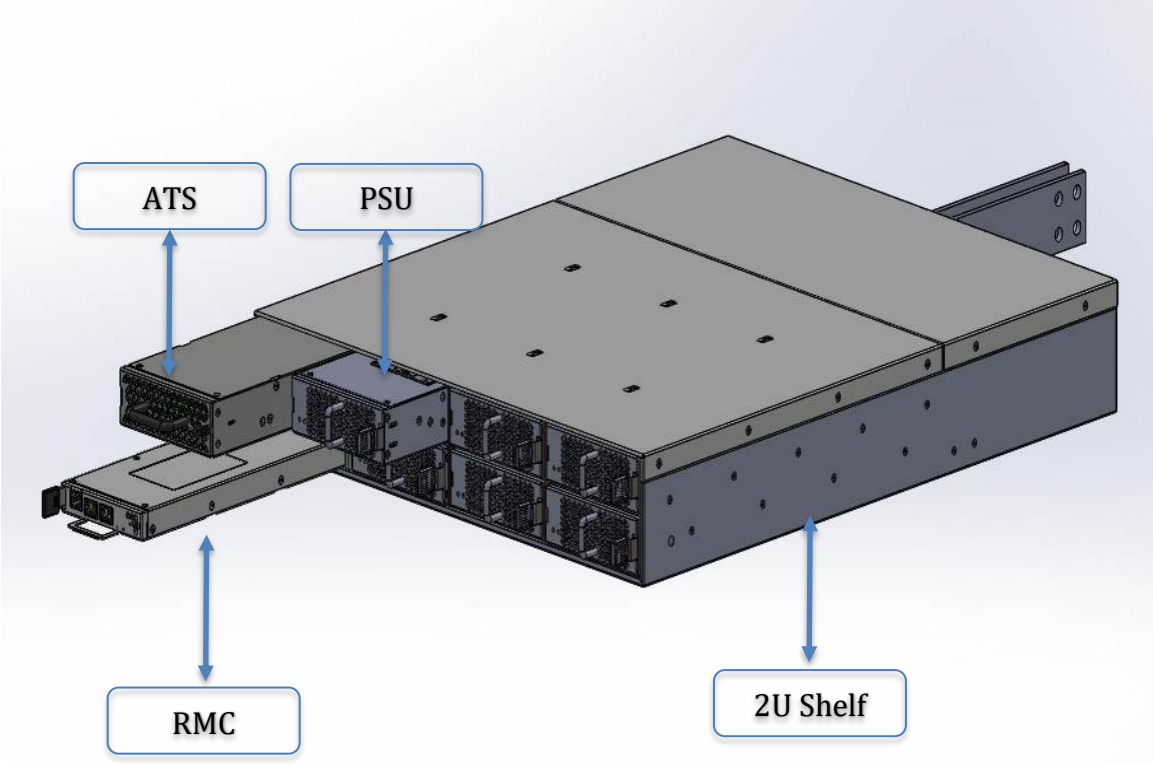

11.2.1. PSU Module

